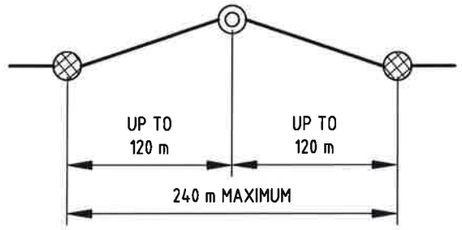

SINGLE MS BETWEEN CONSECUTIVE MH'S

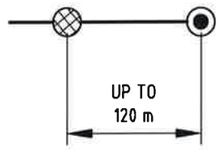

NO MS BETWEEN 'LAST' MH AND TMS

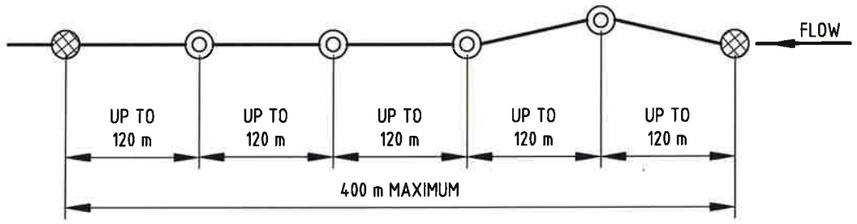

MULTIPLE MS'S BETWEEN CONSECUTIVE MH'S

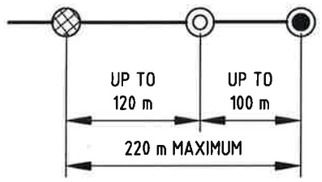

SINGLE MS BETWEEN 'LAST' MH AND TMS

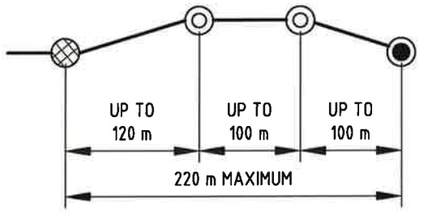

MULTIPLE MS'S BETWEEN 'LAST' MH AND TMS

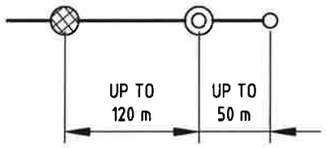

MS BETWEEN 'LAST' MH AND IO

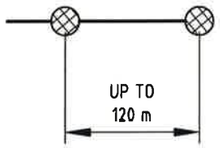

(REFER NOTE 4)

CONSECUTIVE MHS

APPROVED OPTIONS FOR SPACING OF STRUCTURES

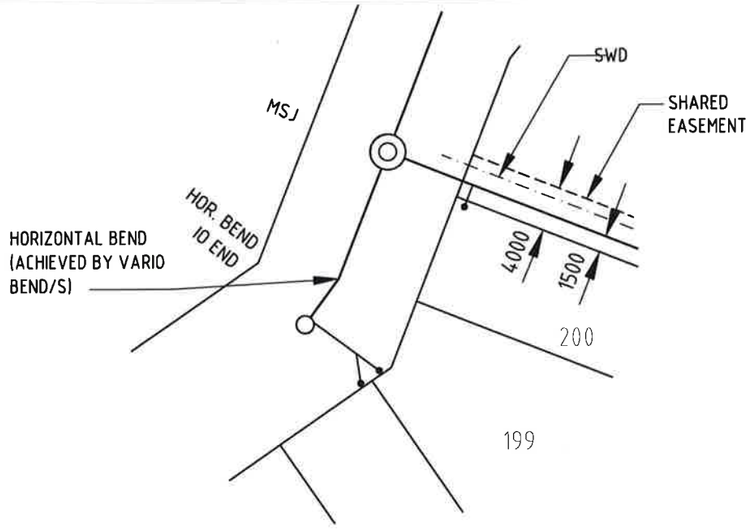

SHARED EASEMENT

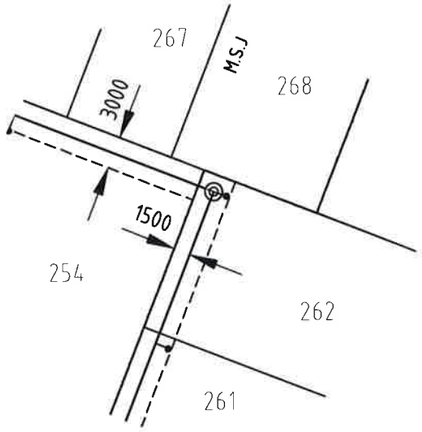

SEWER ONLY EASEMENT

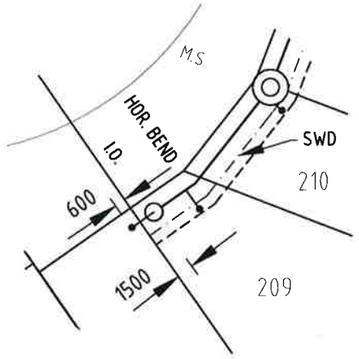

IO WITH CONNECTION AHEAD

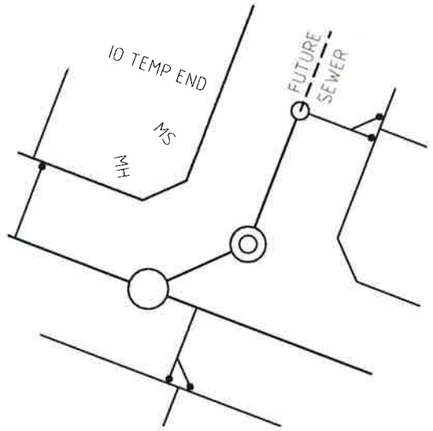

TEMPORARY IO END

LEGEND

- PROPOSED SEWER
- PROPOSED MAINTENANCE HOLE
- MAINTENANCE SHAFT
- MAINTENANCE SHAFT TERMINAL
- FUTURE SEWER
- EXISTING SEWER, CONNECTION AND MAINTENANCE HOLE
- INSPECTION OPENING
- INSPECTION POINT
- EASEMENT

NOTES:

1. REFER 4005-20002-01 TO 4005-20002-03 FOR GENERAL NOTES.
2. GENERALLY SEWER MAIN LOCATED CENTRALLY WITHIN ROAD RESERVE & 1.5 m FROM BOUNDARY WITHIN EASEMENT.
   REFER SA WATER SUPPLEMENTARY DOCUMENTATION TO WSA02-2014 FOR MORE DETAIL.
3. APPROVED OPTIONS FOR POSITIONING AND SPACING OF STRUCTURES AS DEPICTED.
4. IN SPECIAL CIRCUMSTANCES (EG. A STRAIGHT RUN WITH STEEP GRADIENT) SA WATER MAY PERMIT A MH SPACING OF MAXIMUM 150 METRES.
5. STANDARD EASEMENT WIDTHS AS SHOWN.
6. ALL DIMENSIONS IN MILLIMETRES UNLESS NOTED OTHERWISE.

REVISION PANEL

REV	DATE	DRN	DETAILS	APR
1	31/03/16	MS	2016 STANDARDS REVIEW	TG

CURRENT REV
AUTHORISED:
SIGNATURE:

DESIGN PANEL

DESIGNED:	03/08/15	AUTHORISED:	31/03/16
RJP		T.GALEK	
DRAWN:	25/09/15	SIGNATURE:	
MS		T. Galek	
REVIEWED:	21/03/16		
TG			

SA Water

This drawing is the property of the SOUTH AUSTRALIAN WATER CORPORATION and shall not be copied or modified in part or in whole without authorization.

SA WATER STANDARD DRAWINGS
SEWER CONSTRUCTION MANUAL
LOCATION OF MAINTENANCE STRUCTURES IN ROADWAY & EASEMENT (TYPICAL)

A3 SHT SIZE | 1 REVISION

TOTAL SHEETS:

SUPERSEDES: L1, L2

DRAWING NUMBER

4005 - 20005 - 01

PREFIX NUMBER SHEET

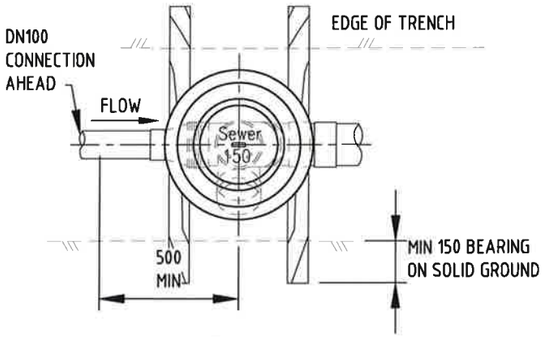

PLAN

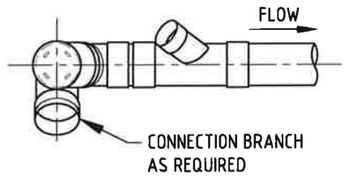

PLAN

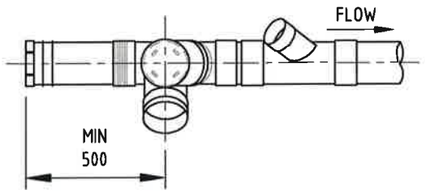

PLAN

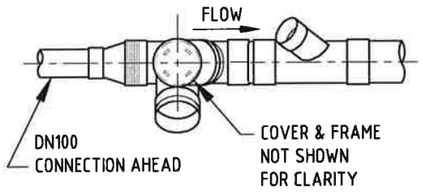

PLAN

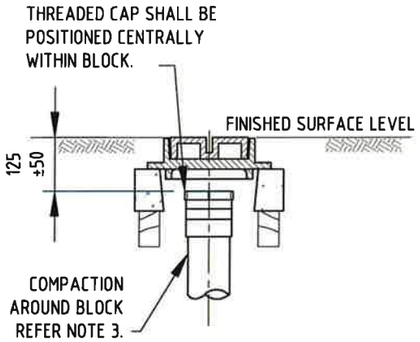

ELEVATION

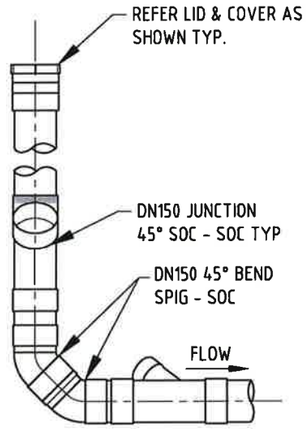

ELEVATION

PERMANENT END

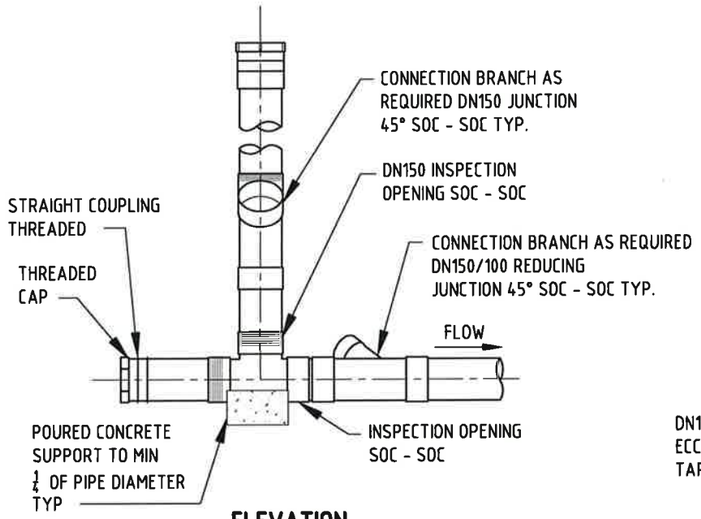

ELEVATION

TEMPORARY END

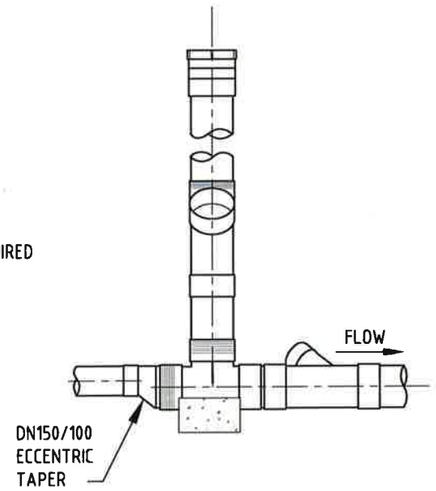

ELEVATION

CONNECTION OFF 10 - AHEAD

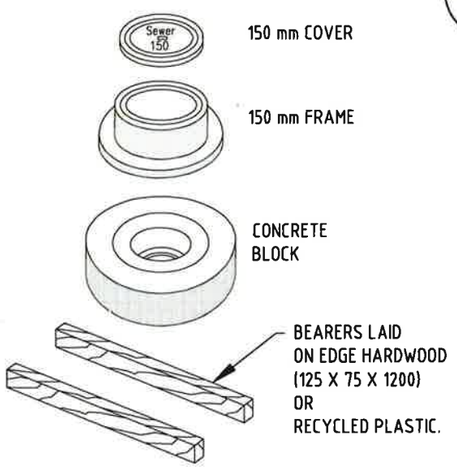

COVER & FRAME

NOTES:

1. REFER 4005-20002-01 TO 4005-20002-03 FOR GENERAL NOTES.
2. REFER 4005-20006-03 FOR TYPICAL SEWER CONNECTION DETAILS.
3. DURING COMPACTION OF THE CONCRETE BLOCK THE COVER & FRAME SHALL BE REMOVED. THE CONTRACTOR SHALL ENSURE THE BLOCK DOES NOT MOVE TO IMPEDE ACCESS TO THE THREADED CAP.
4. ALL DIMENSIONS IN MILLIMETRES.

REVISION PANEL

REV	DATE	DRN	DETAILS	APR
1	31/03/16	MS	2016 STANDARDS REVIEW	TG

CURRENT REV
AUTHORISED:
SIGNATURE:

DESIGN PANEL

DESIGNED:	03/08/15	AUTHORISED:	31/03/16
RJP		T.GALEK	
DRAWN:	25/09/15	SIGNATURE:	
MS		T. Galek	
REVIEWED:	21/03/16		
TG			

SA Water

This drawing is the property of the
© SOUTH AUSTRALIAN WATER CORPORATION
and shall not be copied or modified
in part or in whole without authorization.

SA WATER STANDARD DRAWINGS
SEWER CONSTRUCTION MANUAL

DN150 INSPECTION OPENINGS

A3
SHT SIZE

1
REVISION

TOTAL SHEETS:

SUPERSEDES: 94-0167-03 (L3)

DRAWING NUMBER

4005-20005-02

PREFIX NUMBER SHEET

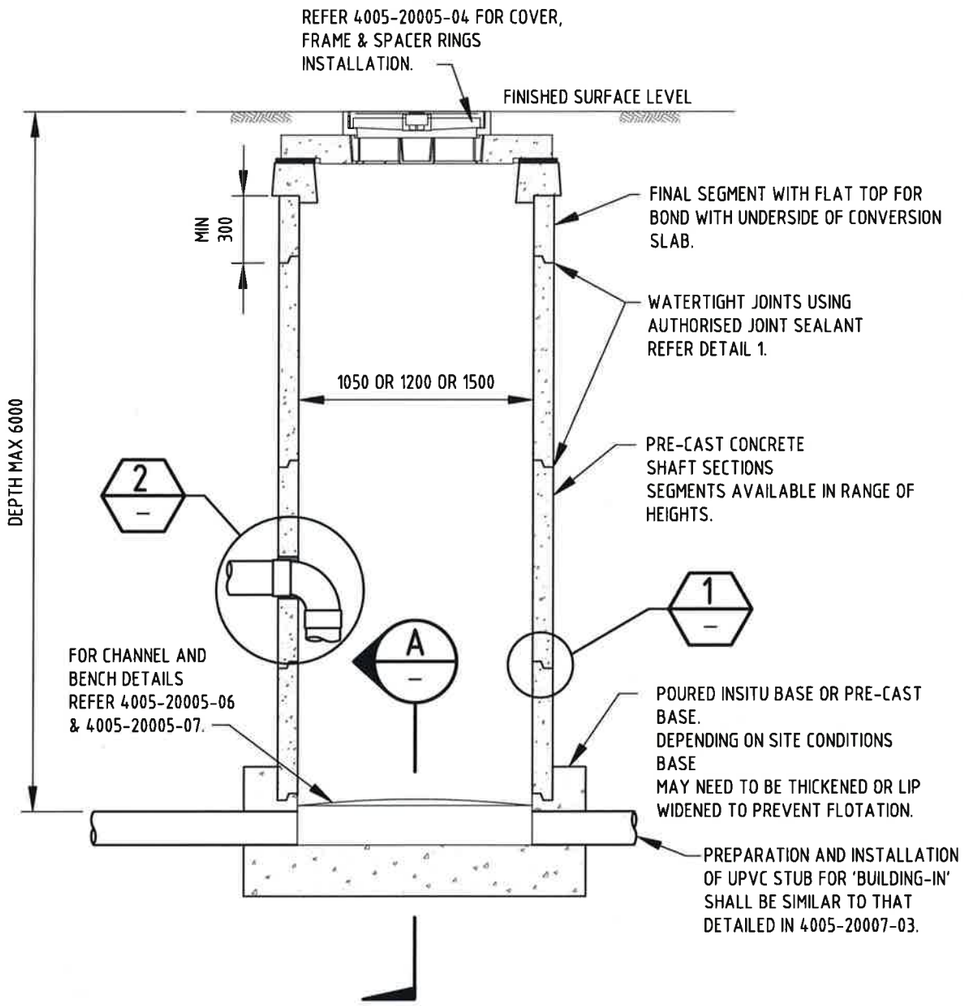

ELEVATION

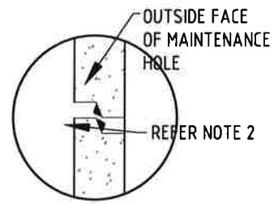

DETAIL 1 / -

TYPICAL JOINT SEALANT

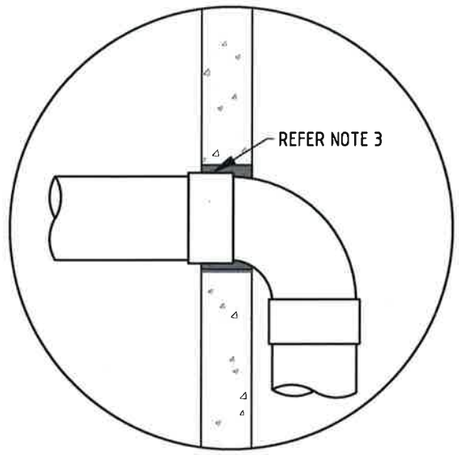

DETAIL 2 / -

TYPICAL WALL REPAIR

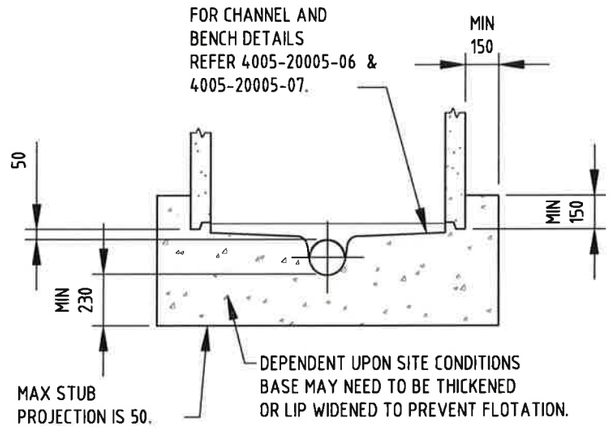

SECTION A / -

NOTES:

1. REFER 4005-20002-01 TO 4005-20002-03 FOR GENERAL NOTES.
2. APPLICATION OF PRECAST SECTIONS JOINT SEALANT:
   - INSPECT COMPONENTS TO ENSURE THERE IS NO DAMAGE TO JOINING SURFACES.
   - ATTACH SEALANT STRIP TO EACH SLOPING FACE.
   - TOP INCREMENT LOWERED INTO PLACE.
   - SEALING COMPOUND IS SQUEEZED INTO JOINT.
3. WALL REPAIR OF CORED HOLE
   - CORE HOLE IN WALL.
   - CLEAN EDGES OF CUT HOLE AROUND INTERNAL/ EXTERNAL WALLS MIN 50 AROUND HOLE.
   - INSERT PIPE & FILL GAP WITH EPIREZ 633, FERROPRE OR APPROVED EQUIVALENT.
   - FOR THICK IN SITU WALLS, MORTAR IS PERMITTED FOR EXTERNAL PORTION (50%).
   - FOLLOWING MANUFACTURERS DRYING TIME REAPPLY FILLER TO INTERNAL WALL TO SEAL ANY POTENTIAL GAPS.
4. CONCRETE POURED IN SITU SHALL BE GRADE N40 IN ACCORDANCE WITH AS 1379.
5. ALL DIMENSIONS IN MILLIMETRES.

REVISION PANEL

REV	DATE	DRN	DETAILS	APR
1	31/03/16	MS	2016 STANDARDS REVIEW	TG

CURRENT REV AUTHORISED:

SIGNATURE:

DESIGN PANEL

DESIGNED:	03/08/15	AUTHORISED:	31/03/16
RJP		T.GALEK	
DRAWN:	25/09/15	SIGNATURE:	
MS		T. Galek	
REVIEWED:	21/03/16		
TG			

SA Water

This drawing is the property of the © SOUTH AUSTRALIAN WATER CORPORATION and shall not be copied or modified in part or in whole without authorization.

SA WATER STANDARD DRAWINGS
SEWER CONSTRUCTION MANUAL
TYPICAL PRECAST MAINTENANCE HOLE ASSEMBLY DETAILS

A3 SHT SIZE | 1 REVISION

TOTAL SHEETS:

SUPERSEDES: L4, L5

DRAWING NUMBER

4005-20005-03

PREFIX NUMBER SHEET

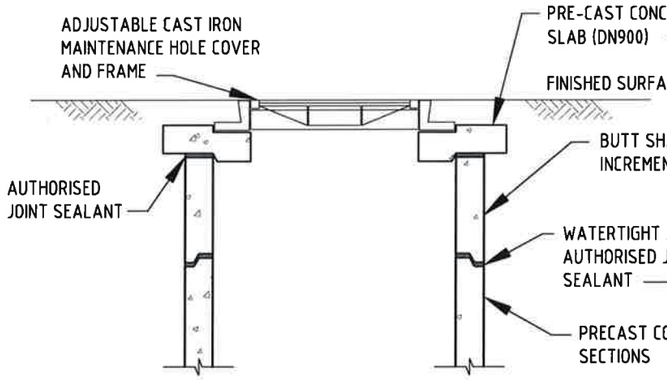

900 ID MAINTENACE HOLE LID ARRANGEMENT

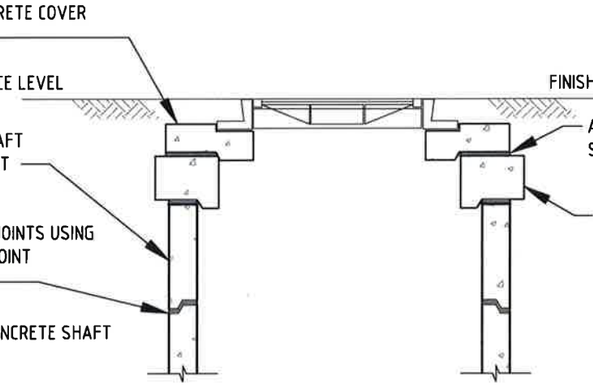

1050 ID MAINTENACE HOLE LID ARRANGEMENT

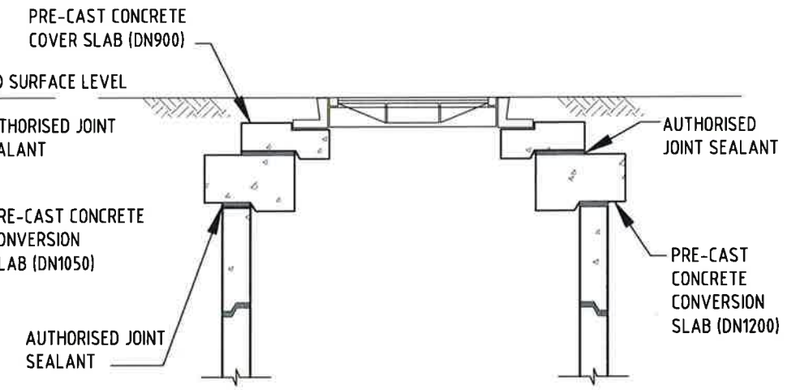

1200 ID MAINTENACE HOLE LID ARRANGEMENT

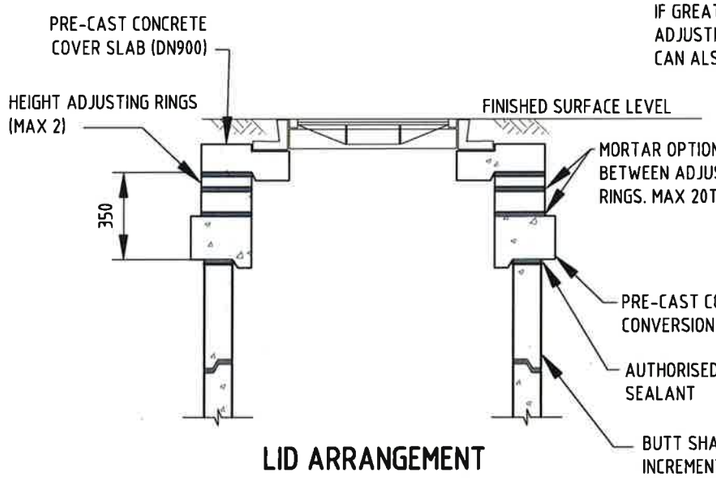

LID ARRANGEMENT WITH SPACER RINGS

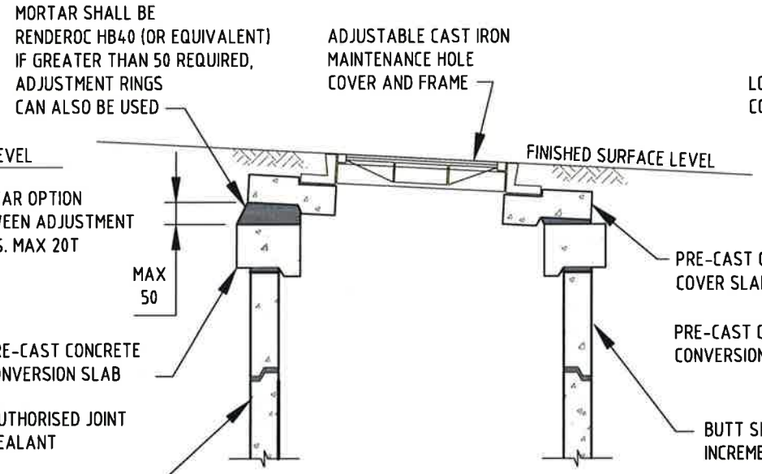

SLOPING LID ARRANGEMENT WITH MORTAR JOINT

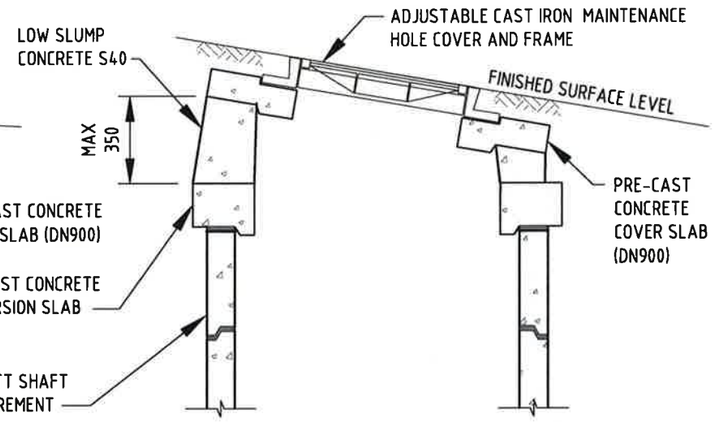

SLOPING LID ARRANGEMENT WITH CONCRETE JOINT

FINISHED SURFACE LEVEL TOLERANCES	
SITUATION	TOLERANCES
IN ROAD RESERVE INCLUDING SEALED PAVEMENTS, ROAD VERGES DRIVEWAYS, FOOTPATHS, PEDESTRIANS THOROUGHFARES.	+10 mm HIGH - 5 mm LOW
SEALED AND TRAFFICABLE AREAS WITHIN PRIVATE PROPERTIES. (PEDESTRIAN AND/OR VEHICULAR TRAFFIC)	+15 mm HIGH - 5 mm LOW
IN PRIVATE PROPERTY INCLUDING GARDEN AREAS, UNSEALED AREAS, NON-TRAFFICABLE AREAS OR AREAS OF OCCASIONAL TRAFFIC (PEDESTRIAN AND/OR VEHICLE TRAFFIC)	+20 mm HIGH - 5 mm LOW

NOTES:

1. REFER 4005-20002-01 TO 4005-20002-03 FOR GENERAL NOTES.
2. REFER 4005-20005-03, NOTE 2 FOR INSTRUCTIONS REGARDING COMPONENTS.
3. APPROVED METHODS OF ACHIEVING THE REQUIRED FINISHED LEVEL (FSL) ARE PRESENTED ON THIS DRAWING.

REVISION PANEL

REV	DATE	DRN	DETAILS	APR
1	31/03/16	MS	2016 STANDARDS REVIEW	TG

CURRENT REV
AUTHORISED:
SIGNATURE:

DESIGN PANEL

DESIGNED:	03/08/15	AUTHORISED:	31/03/16
RJP		T.GALEK	
DRAWN:	25/09/15	SIGNATURE:	
MS		T. Galek	
REVIEWED:	21/03/16		
TG			

Government of South Australia
SA Water

This drawing is the property of the SOUTH AUSTRALIAN WATER CORPORATION and shall not be copied or modified in part or in whole without authorization.

SA WATER STANDARD DRAWINGS
SEWER CONSTRUCTION MANUAL
MAINTENANCE HOLE LID ADJUSTMENT
TYPICAL DETAILS

A3 SHT SIZE | 1 REVISION

TOTAL SHEETS:

SUPERSEDES: L5, L6, L15

DRAWING NUMBER

4005 – 20005 – 04

PREFIX NUMBER SHEET

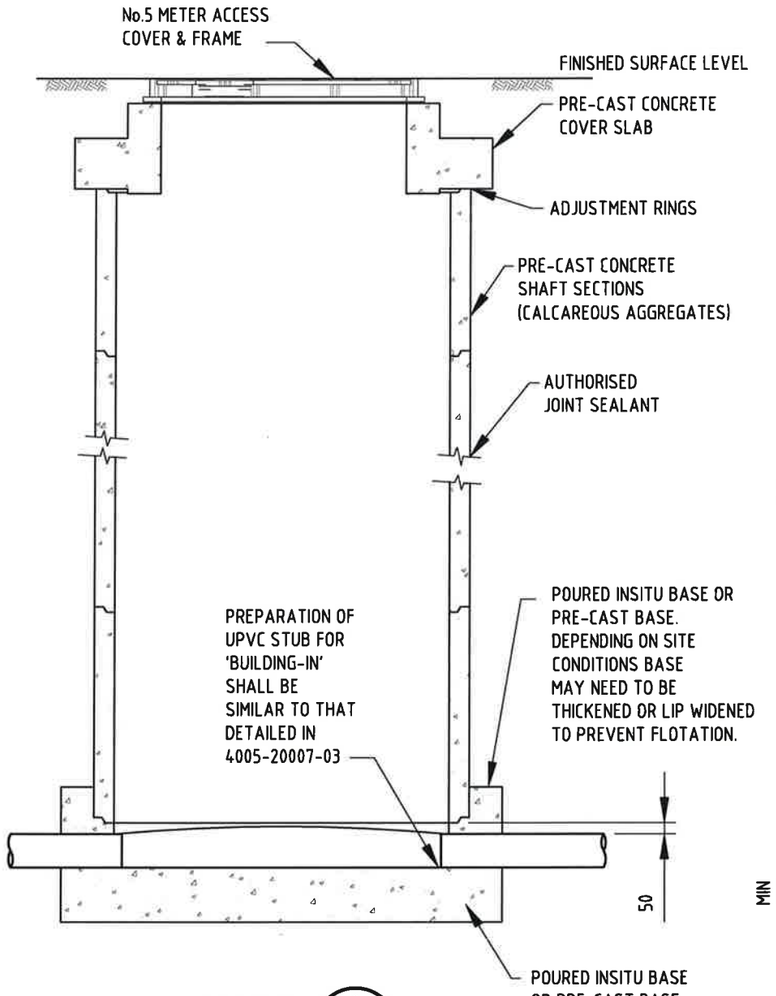

SECTION A

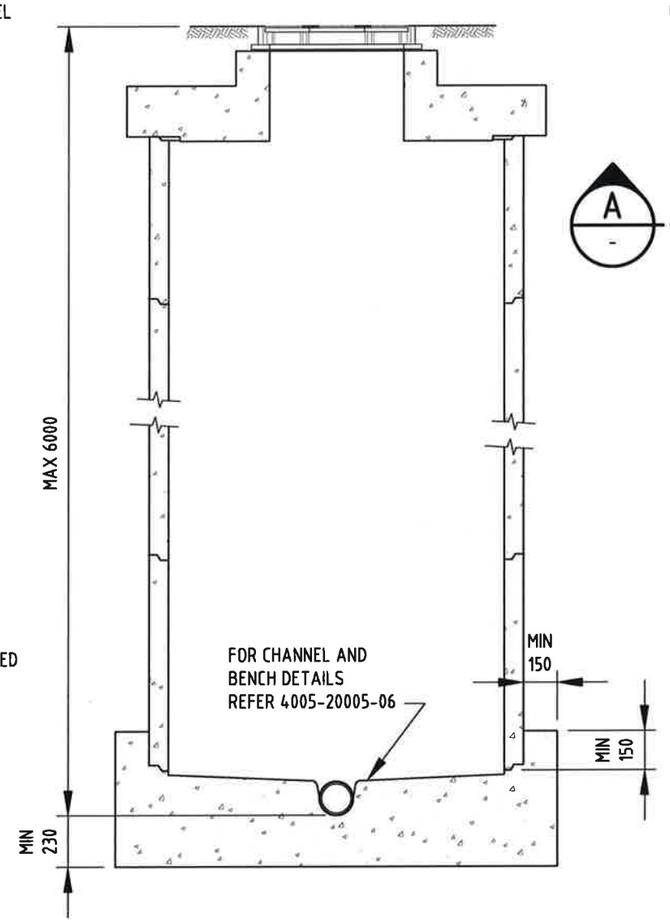

SECTION B

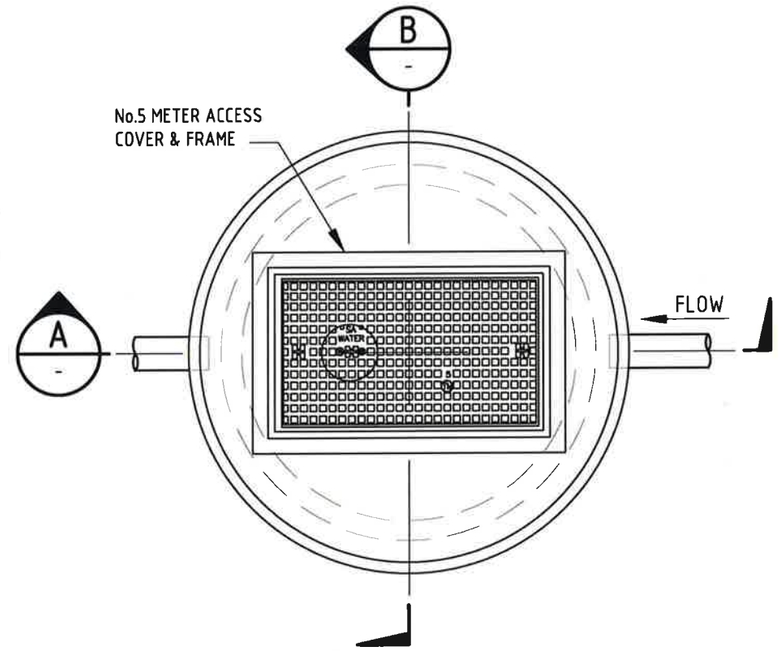

PLAN

NOTES:

1. REFER 4005-20002-01 TO 4005-20002-03 FOR GENERAL NOTES.
2. ALL DIMENSIONS IN MILLIMETRES.

REVISION PANEL

REV	DATE	DRN	DETAILS	APR
1	31/03/16	MS	2016 STANDARDS REVIEW	TG

CURRENT REV
AUTHORISED:
SIGNATURE:

DESIGN PANEL

DESIGNED:	03/08/15	AUTHORISED:	31/03/06
RJP		T.GALEK	
DRAWN:	25/09/15	SIGNATURE:	
MS		T. Galek	
REVIEWED:	21/03/16		
TG			

SA Water

This drawing is the property of the
© SOUTH AUSTRALIAN WATER CORPORATION
and shall not be copied or modified in part or in whole without authorization.

SA WATER STANDARD DRAWINGS
SEWER CONSTRUCTION MANUAL
1500 ID MAINTENANCE HOLE
TYPICAL DETAILS

A3 SHT SIZE | 1 REVISION

TOTAL SHEETS:

SUPERSEDES: 94-0167-08 (L8)

DRAWING NUMBER

4005-20005-05

PREFIX NUMBER SHEET

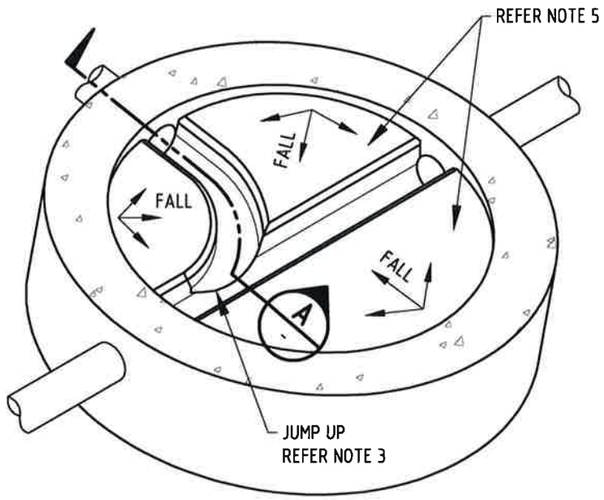

TYPICAL BRANCH

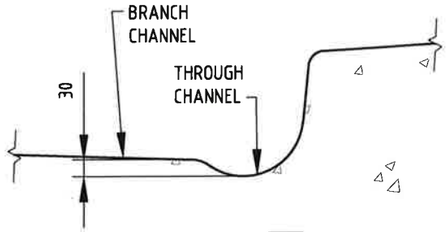

DETAIL 1 -

JUNCTION BETWEEN SEWERS OF EQUAL DIAMETER
(BRANCH DEFLECTION >45° AND ≤ 90°)

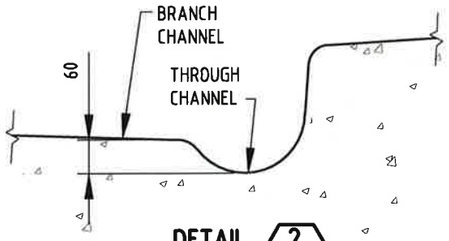

DETAIL 2 -

JUNCTION BETWEEN SEWERS OF EQUAL DIAMETER (BRANCH DEFLECTION >90°)

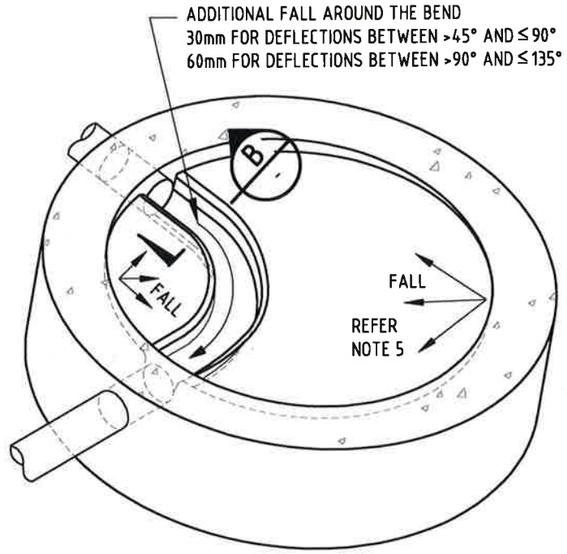

BEND (TYPICAL)

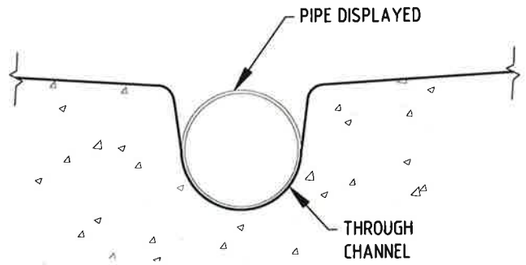

SECTION B -

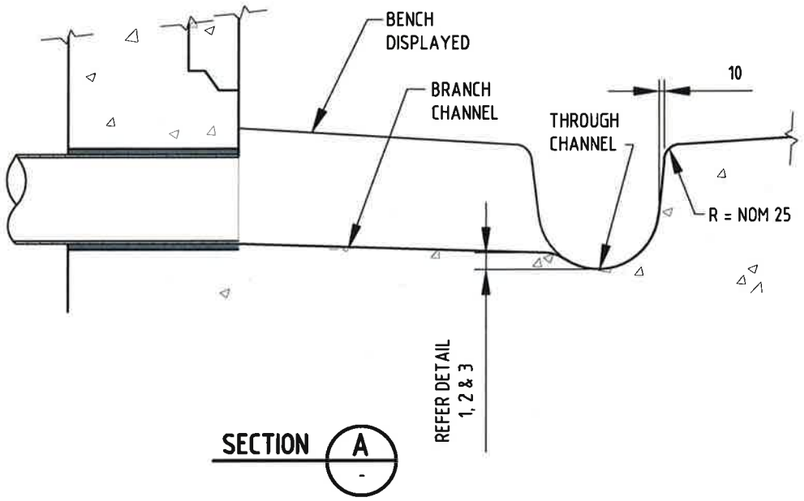

SECTION A -

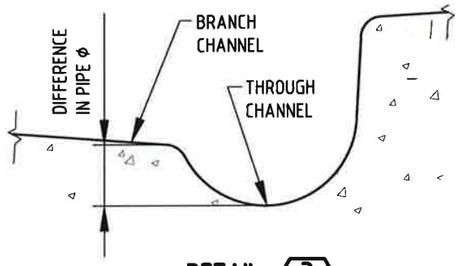

DETAIL 3 -

JUNCTION BETWEEN SEWERS OF
DIFFERENT DIAMETER DN300 OR LARGER

NOTES:

1. REFER 4005-20002-01 TO 4005-20002-03 FOR GENERAL NOTES.
2. RADIUS OF CURVATURE TO THE INSIDE WALL OF THE CHANNEL SHALL BE EQUAL TO THE PIPE DIAMETER FOR THAT PARTICULAR BEND/ BRANCH.
3. 'JUMP-UPS' AND ADDITIONAL FALL AROUND BENDS ARE APPLICABLE UP TO DN225 SEWERS ONLY.
4. FOR SEWERS DN300 & DN375 THE JUNCTION WITH BRANCH SEWERS SHALL BE DESIGNED TOP TO TOP.
5. BENCH FALL FROM WALL TO CHANNEL = 25 - 30 mm.
6. ALL DIMENSIONS IN MILLIMETRES.

REVISION PANEL

REV	DATE	DRN	DETAILS	APR
1	03/08/15	MS	2016 STANDARDS REVIEW	TG

CURRENT REV
AUTHORISED:
SIGNATURE:

DESIGN PANEL

DESIGNED:	03/08/15	AUTHORISED:	31/03/16
RJP		T.GALEK	
DRAWN:	25/09/15	SIGNATURE:	
MS		T. Galek	
REVIEWED:	21/03/16		
TG			

SA Water

This drawing is the property of the
© SOUTH AUSTRALIAN WATER CORPORATION
and shall not be copied or modified in part or in whole without authorization.

SA WATER STANDARD DRAWINGS
SEWER CONSTRUCTION MANUAL
MAINTENANCE HOLE
BENCH & CHANNEL
TYPICAL DETAIL

A3 SHT SIZE | 1 REVISION

TOTAL SHEETS:

SUPERSEDES: 94-0167-09 (L9)

DRAWING NUMBER
4005 - 20005 - 06
PREFIX NUMBER SHEET

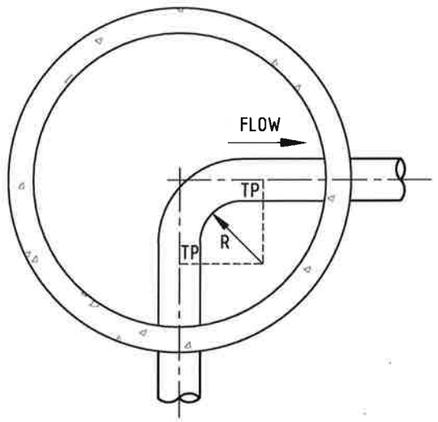

90° BEND

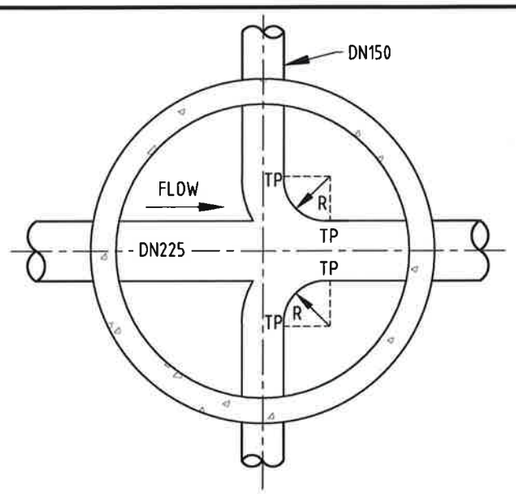

BRANCH LEFT AND RIGHT

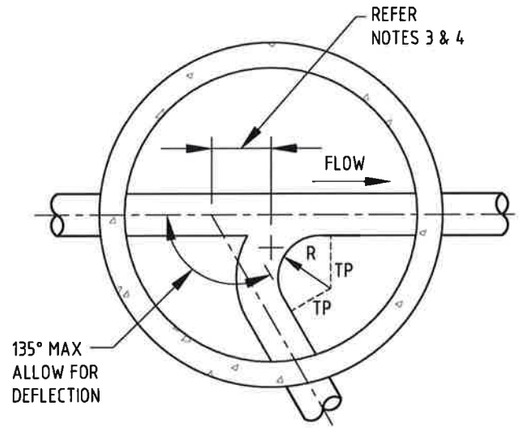

OBTUSE BRANCH

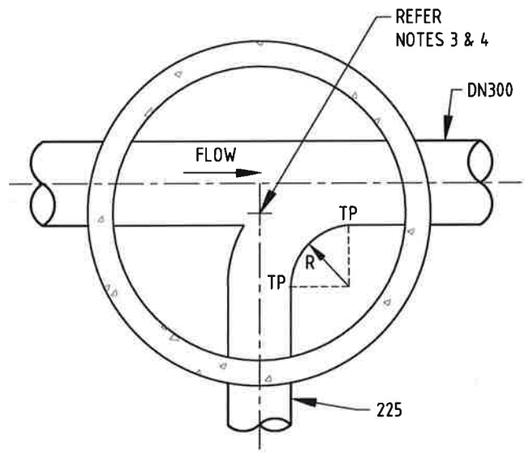

BRANCH INTO LARGER MAIN

(MH IS OFFSET REFER NOTE 3)

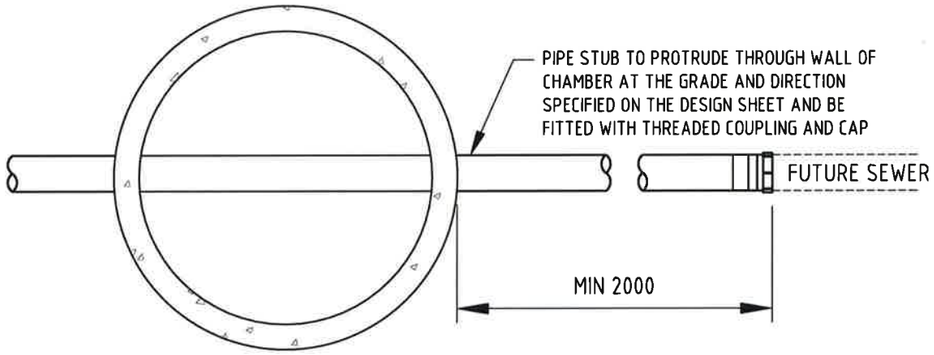

PLAN

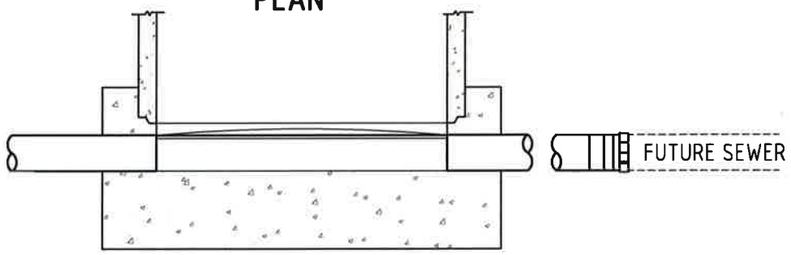

ELEVATION

MAINTENANCE HOLE WITH TEMPORARY END

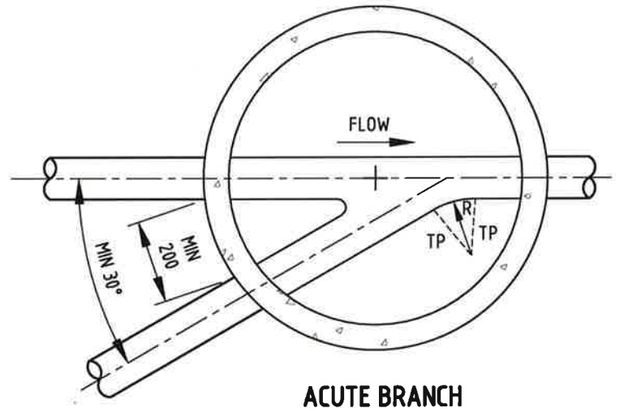

ACUTE BRANCH

LEGEND:

R	RADIUS - REFER NOTE 2
TP	TANGENT POINT
+	CENTRE OF ACCESS CHAMBER
	INTERSECTION POINT

NOTES:

1. REFER 4005-20002-01 TO 4005-20002-03 FOR GENERAL NOTES.
2. RADIUS OF CURVATURE (R) TO THE INSIDE WALL OF THE BEND SHALL BE EQUAL TO THE PIPE DIAMETER FOR THAT PARTICULAR BEND/ BRANCH.
3. MAINTENANCE HOLE MAY BE OFFSET FROM THE INTERSECTION POINT TO ENSURE MAXIMUM LENGTH OF OPEN CHANNEL OR FOR THE TEMPORARY END OPTION MAINTAIN THE MINIMUM 200 LENGTH OF THE SHAFT SECTION.
4. ALL TANGENT POINTS OF BENDS AND BRANCHES SHALL BE CONTAINED WITHIN MAINTENANCE HOLE.
5. ALL DIMENSIONS IN MILLIMETRES.

REVISION PANEL

REV	DATE	DRN	DETAILS	APR
1	31/03/16	MS	2016 STANDARDS REVIEW	TG

CURRENT REV
AUTHORISED:
SIGNATURE:

DESIGN PANEL

DESIGNED:	03/08/15	AUTHORISED:	31/03/16
RJP		T.GALEK	
DRAWN:	25/09/15	SIGNATURE:	
MS		T.Galek	
REVIEWED:	21/03/16		
TG			

Government of South Australia
SA Water

This drawing is the property of the
© SOUTH AUSTRALIAN WATER CORPORATION
and shall not be copied or modified in part or in whole without authorization.

SA WATER STANDARD DRAWINGS
SEWER CONSTRUCTION MANUAL
MAINTENANCE HOLE CHANNEL CONFIGURATIONS AND TEMPORARY END

A3 SHT SIZE | 1 REVISION

TOTAL SHEETS:

SUPERSEDES: 94-0167-10 (L10)

DRAWING NUMBER

4005 – 20005 – 07

PREFIX NUMBER SHEET

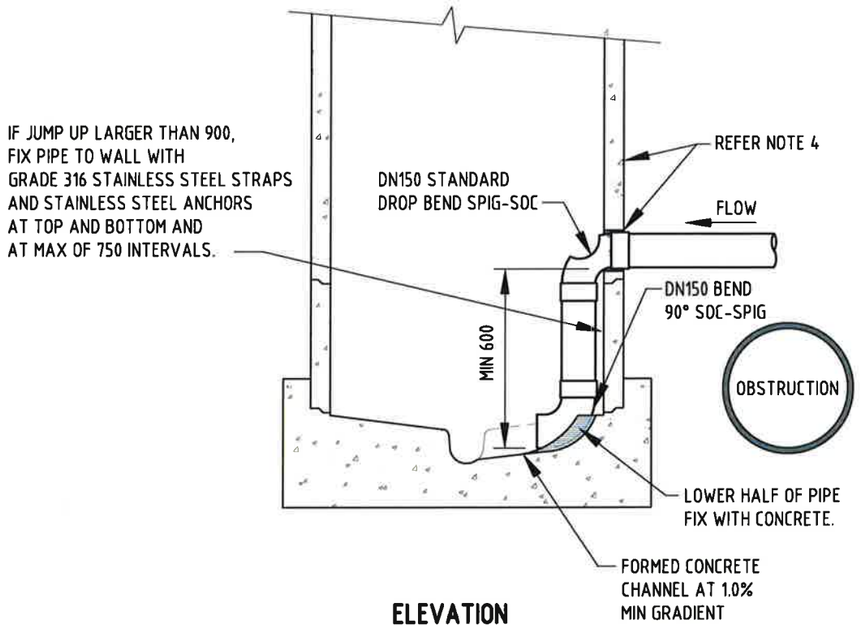

ELEVATION

NEW MAINTENANCE HOLE
INTERNAL JUMP UP OPTION
(PREFERRED)

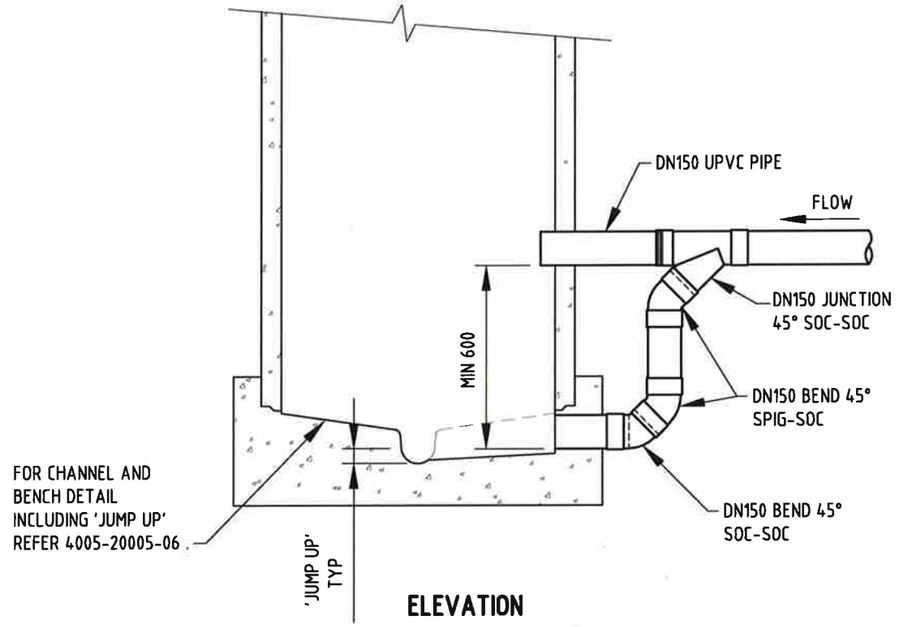

ELEVATION

NEW MAINTENANCE HOLE
EXTERNAL JUMP UP OPTION

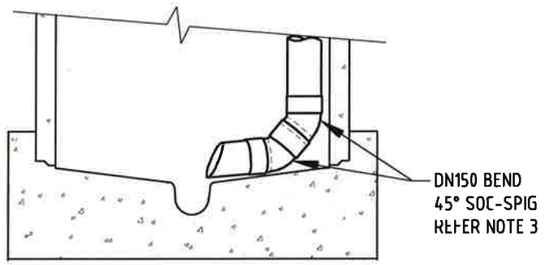

ELEVATION

EXISTING MAINTENANCE HOLE
INTERNAL JUMP UP OPTION

NOTES:

1. REFER 4005-20001-01 TO 4005-20001-03 FOR GENERAL NOTES.
2. THE INTERNAL JUMP UP OPTION SHALL BE PREFERRED METHOD. THE EXTERNAL JUMP UP OPTION IS SUBJECT TO APPROVAL BY SA WATER REPRESENTATIVE.
3. DISCHARGE PIPE TO BE TURNED TO DIRECT SEWAGE IN DIRECTION OF MAIN FLOW.
4. REFER TO 4005-20005-03 FOR MAINTENANCE HOLE TYPICAL PRECAST STRUCTURE ASSEMBLY DETAILS AND INSTALLATION OF THE PIPE THROUGH THE WALL.
5. EXTERNAL JUMP UP: FOR STEEP SEWER GRADIENTS, USE ADDITIONAL BEND(S) TO ENSURE 'JUMP UP' REMAINS VERTICAL.
6. MAXIMUM OF 2 INTERNAL JUMP-UPS PER MAINTENANCE HOLE IS PERMITTED.
7. ALL DIMENSIONS IN MILLIMETRES.

REVISION PANEL

REV	DATE	DRN	DETAILS	APR
1	31/03/16	MS	2016 STANDARDS REVIEW	TG

CURRENT REV
AUTHORISED:
SIGNATURE:

DESIGN PANEL

DESIGNED:	03/08/15	AUTHORISED:	31/03/16
RJP		T.GALEK	
DRAWN:	25/09/15	SIGNATURE:	
MS		T. Galek	
REVIEWED:	21/03/16		
TG			

SA Water

This drawing is the property of the
© SOUTH AUSTRALIAN WATER CORPORATION
and shall not be copied or modified in part or in whole without authorization.

SA WATER STANDARD DRAWINGS
SEWER CONSTRUCTION MANUAL
MAINTENANCE HOLE
WITH JUMP UP INTERNAL/ EXTERNAL OPTIONS

A3 SHT SIZE | 1 REVISION

TOTAL SHEETS:

SUPERSEDES: L11, L12

DRAWING NUMBER

4005 – 20005 – 08

PREFIX NUMBER SHEET

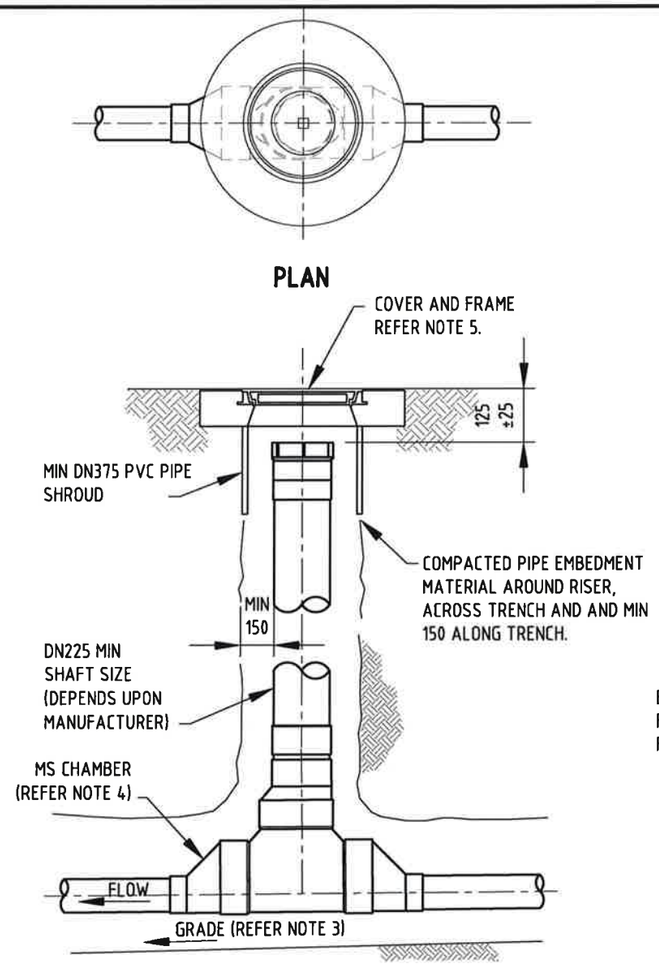

ELEVATION

MAINTENANCE SHAFT (MS)

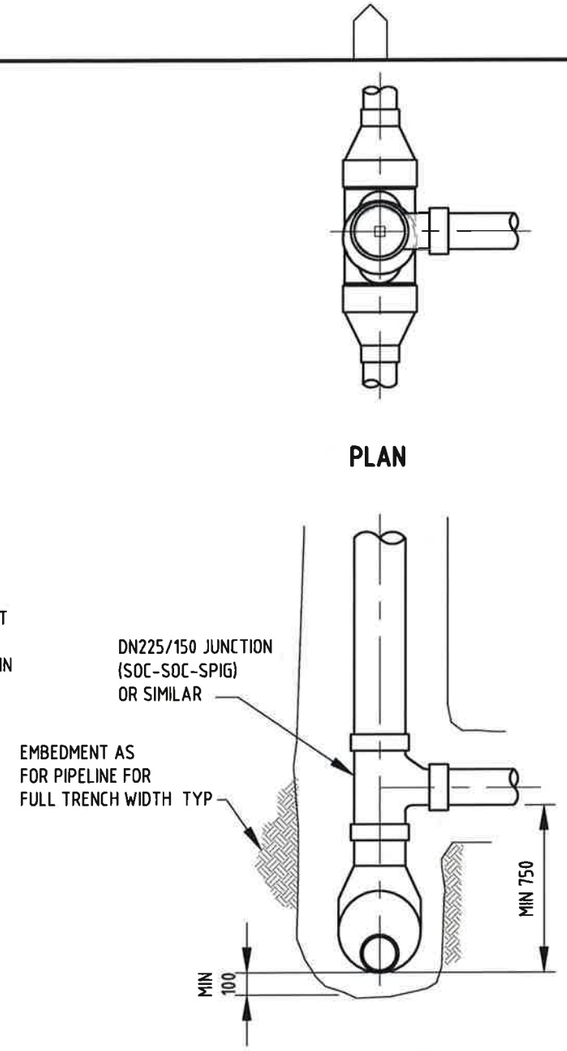

END ELEVATION

PLAN RISER SHAFT

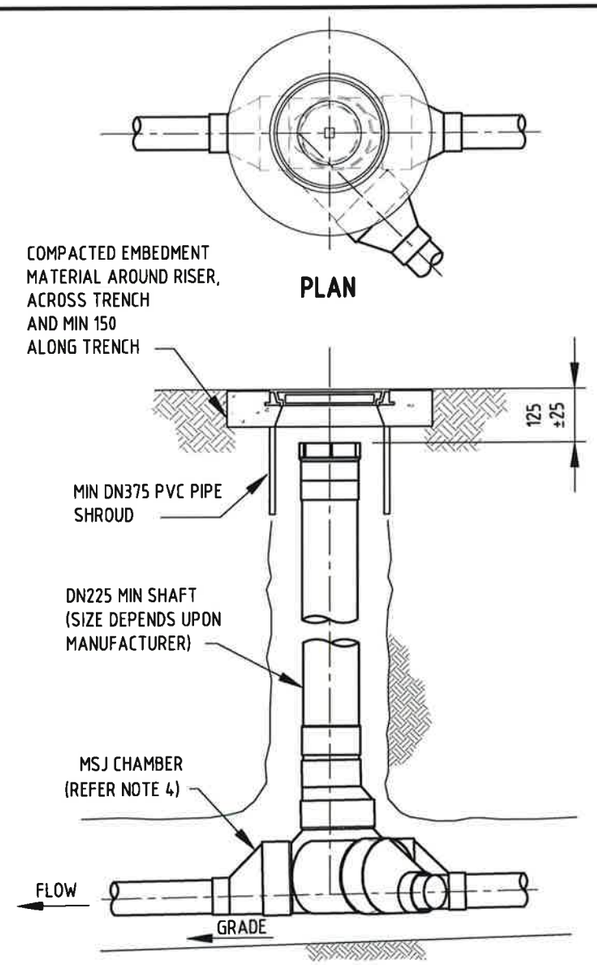

ELEVATION

MAINTENANCE SHAFT JUNCTION (MSJ)

NOTES:

1. REFER 4005-20002-01 TO 4005-20002-03 FOR GENERAL NOTES.
2. FOR 'DROP JUNCTION' OPTION, MAX 2 PROPERTY CONNECTIONS PERMITTED.
3. ADJUST MS TO PIPE GRADE BY TILTING CHAMBER. MAX DEVIATION FROM VERTICAL OF THE RISER TO BE 1:10 OR A MAXIMUM OF 300 AT SURFACE. USE KICKER BEND IF REQUIRED TO ADJUST RISER TO VERTICAL.
4. MAINTENANCE SHAFT & COMPONENTS (BASE, SHAFT, JUNCTIONS ETC.) SHALL BE OBTAINED FROM ONE MANUFACTURER & SHALL NOT BE MIXED.
5. FOR LID & COVER TYPE REFER APPROVED PRODUCTS GRAVITY AND PRESSURE SEWER SYSTEMS. INSTALLATION SHALL BE AS PER 4005-20005-04.
6. MAINTENANCE SHAFTS SHALL ONLY BE PERMITTED UP TO A MAXIMUM DEPTH TO INVERT OF 5000.
7. ALL DIMENSIONS IN MILLIMETRES.

REVISION PANEL

REV	DATE	DRN	DETAILS	APR
1	31/03/16	MS	2016 STANDARDS REVIEW	TG

CURRENT REV
AUTHORISED:

SIGNATURE:

DESIGN PANEL

DESIGNED:	03/08/15	AUTHORISED:	31/03/16
RJP		T.GALEK	
DRAWN:	25/09/15	SIGNATURE:	
MS		T.Galek	
REVIEWED:	21/03/16		
TG			

SA Water

This drawing is the property of the
© SOUTH AUSTRALIAN WATER CORPORATION
and shall not be copied or modified in part or in whole without authorization.

SA WATER STANDARD DRAWINGS
SEWER CONSTRUCTION MANUAL
MAINTENANCE SHAFT INSTALLATION

A3 SHT SIZE

1 REVISION

TOTAL SHEETS:

SUPERSEDES: 02-0291-01 (L18)

DRAWING NUMBER

4005 - 20005 - 09

PREFIX NUMBER SHEET

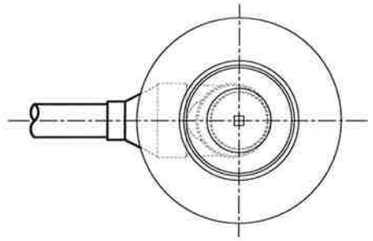

PLAN

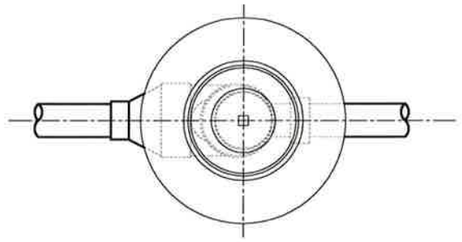

PLAN

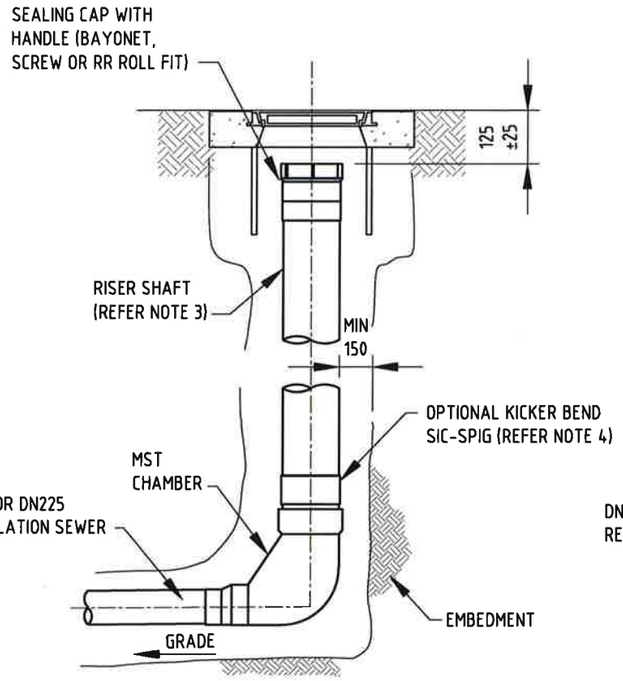

ELEVATION

TERMINAL END (MST)

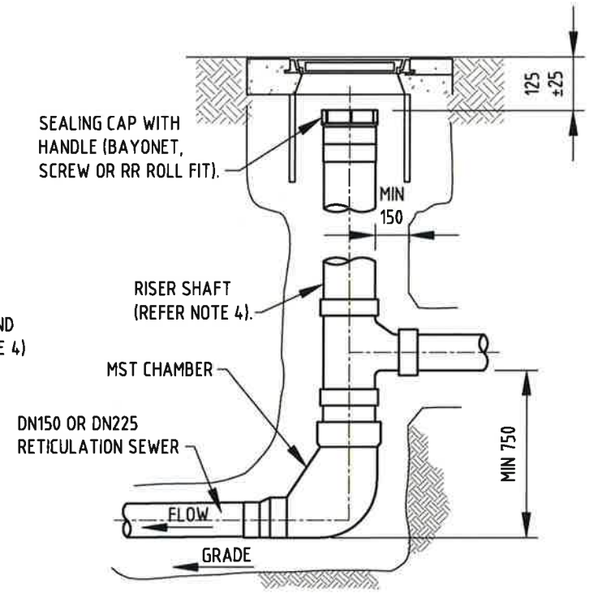

ELEVATION

TERMINAL END (MST)
WITH DROP JUNCTION

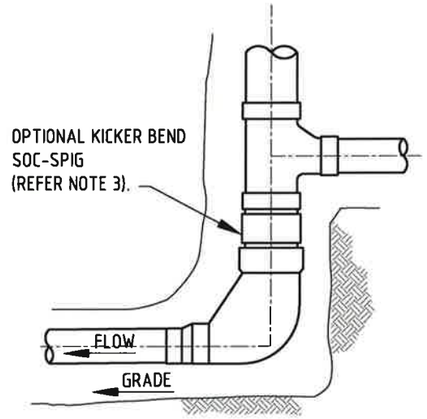

ELEVATION

TERMINAL END (MST)
KICKER BEND ALTERNATIVE

NOTES:

1. REFER 4005-20002-01 TO 4005-20002-03 FOR GENERAL NOTES.
2. FOR 'DROP JUNCTION' OPTION, MAX 2 PROPERTY CONNECTIONS PERMITTED.
3. ADJUST MS TO PIPE GRADE BY TILTING CHAMBER. MAX DEVIATION FROM VERTICAL OF THE RISER TO BE 1:10 OR A MAXIMUM OF 300 AT SURFACE. USE KICKER BEND IF REQUIRED TO ADJUST RISER TO VERTICAL.
4. MAINTENANCE SHAFT & COMPONENTS (BASE, SHAFT, JUNCTIONS ETC.) SHALL BE OBTAINED FROM ONE MANUFACTURER & SHALL NOT BE MIXED.
5. FOR LID & COVER TYPE REFER AUTHORISED ITEMS CATALOGUE. INSTALLATION SHALL BE AS PER 4005-20005-04.
6. MAXIMUM 1 RETICULATION PIPE PERMITTED INTO THE MAINTENANCE SHAFT RISER.
7. MAINTENANCE SHAFTS SHALL ONLY BE PERMITTED UP TO A MAXIMUM DEPTH TO INVERT OF 5000.
8. ALL DIMENSIONS IN MILLIMETRES.

REVISION PANEL

REV	DATE	DRN	DETAILS	APR
1	31/03/16	MS	2016 STANDARDS REVIEW	TG

CURRENT REV
AUTHORISED:
SIGNATURE:

DESIGN PANEL

DESIGNED:	03/08/15	AUTHORISED:	31/03/16
RJP		T.GALEK	
DRAWN:	25/09/15	SIGNATURE:	
MS		T. Galek	
REVIEWED:	21/03/16		
TG			

SA Water

This drawing is the property of the
© SOUTH AUSTRALIAN WATER CORPORATION
and shall not be copied or modified in part or in whole without authorization.

SA WATER STANDARD DRAWINGS
SEWER CONSTRUCTION MANUAL
MAINTENANCE SHAFT
TERMINAL

A3 SHT SIZE | 1 REVISION

TOTAL SHEETS:

SUPERSEDES: 02-0289-01 (L16)

DRAWING NUMBER

4005 – 20005 – 10

PREFIX NUMBER SHEET

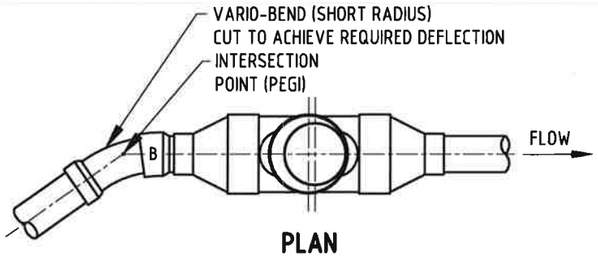

PLAN
MS WITH HORIZONTAL BEND

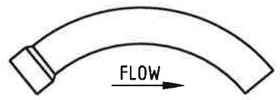

VARIO-BEND

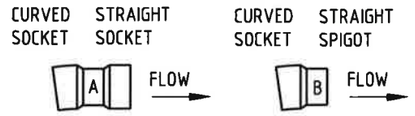

VARIO-BEND ADAPTORS

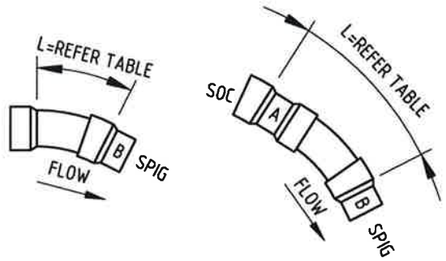

VARIO-BEND ADAPTOR COMBINATIONS

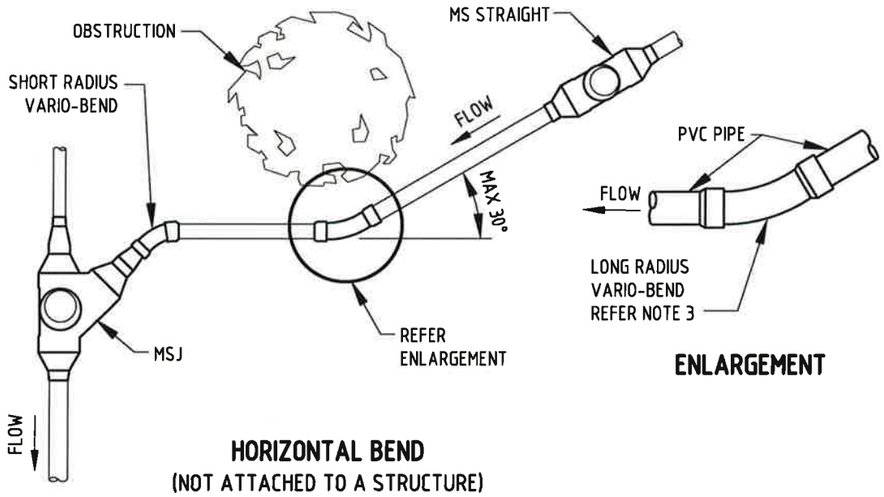

ENLARGEMENT

HORIZONTAL BEND
(NOT ATTACHED TO A STRUCTURE)

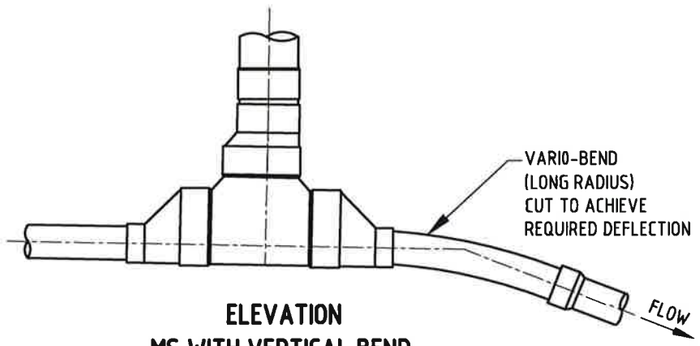

ELEVATION
MS WITH VERTICAL BEND

NOTES:

1. REFER 4005-20002-01 TO 4005-20002-03 FOR GENERAL NOTES.
2. POSSIBLE VARIO-BEND ALTERNATIVES USING DIFFERENT COMBINATIONS OF ADAPTORS:
   - SOCKET/SPIGOT BEND
   - SOCKET/SOCKET BEND
   - SPIGOT/SPIGOT BEND
2. BEND CONFIGURATION:
   PIPES SHALL BE LAID FROM THE DOWNSTREAM END OF THE SYSTEM, WITH THE SOCKET ENDS FACING UPSTREAM.
   SHOULD THIS NOT BE POSSIBLE, APPROVAL OF THE SA WATER REPRESENTATIVE SHALL BE SOUGHT FOR AN ALTERNATIVE ARRANGEMENT.
3. HORIZONTAL BEND NOT ATTACHED TO A STRUCTURE:
   LONG RADIUS VARIO-BEND OPTION ILLUSTRATED. THE USE OF MULTIPLE BENDS AND COLD BENDING OF PVC PIPE ARE ALSO PERMITTED. HOWEVER BETWEEN STRUCTURES, THE COMBINED TOTAL OF ALL DEFLECTIONS SHALL NOT EXCEED 30°.
   REFER 4005-20002-02 FOR INFORMATION ON COLD BENDING PVC PIPE.
4. ALL VERTICAL BENDS SHALL BE LONG RADIUS BENDS.
5. COMPOUND BENDS (HORIZONTAL AND VERTICAL BENDS AT THE SAME POINT) SHALL NOT BE USED WITHOUT SPECIFIC APPROVAL FROM THE SA WATER REPRESENTATIVE.

TABLE 1: 'VARIO-BEND' CUTTING DETAILS

DEFLECTION		HORIZONTAL/VERTICAL BEND LONG RADIUS R=3000mm	HORIZONTAL BEND IMMEDIATELY UPSTREAM OF MS SHORT RADIUS R=635mm
DEGREES	%	LENGTH (mm) MEASURED ALONG OUTSIDE CURVED FACE OF 'VARIO-BEND'	
		L=53.8mm PER 1°	L=12.5mm PER 1°
2	3.49	MIN 110	N/A
3	5.24	160	N/A
4	6.99	215	N/A
5	8.74	270	N/A
6	10.51	325	N/A
7	12.27	375	N/A
8	14.05	430	MIN 100
9	15.83	485	110
10	17.63	540	125
11	19.43	590	135
12	21.25	645	150
13	23.08	700	160
14	24.93	755	175
15	26.79	805	185
16	28.67	860	200
17	30.57	915	210
18	32.49	970	225
19	34.43	1020	235
20	36.40	1075	250
21	38.38	1130	260
22	40.40	1185	275
23	42.44	1235	285
24	44.52	1290	300
25	46.63	1345	310
26	48.77	1400	325
27	50.95	1450	335
28	53.17	1505	350
29	55.43	1560	360
30	57.73	MAX 1615	375
31	60.08	-	390
32	62.48	-	400
33	64.94	-	415
34	67.45	-	425
35	70.02	-	440
36	72.65	-	450
37	75.35	-	465
38	78.12	-	475
39	80.97	-	490
40	83.90	-	500
41	86.92	-	515
42	90.04	-	525
43	93.25	-	540
44	96.56	-	550
45	100.00	-	MAX 565

REVISION PANEL

REV	DATE	DRN	DETAILS	APR
1	31/03/16	MS	2016 STANDARDS REVIEW	TG

CURRENT REV
AUTHORISED:
SIGNATURE:

DESIGN PANEL

DESIGNED:	03/08/15	AUTHORISED:	31/03/16
RJP		T.GALEK	
DRAWN:	25/09/15	SIGNATURE:	
MS		T. Galek	
REVIEWED:	21/03/16		
TG			

Government of South Australia
SA Water

This drawing is the property of the SOUTH AUSTRALIAN WATER CORPORATION and shall not be copied or modified in part or in whole without authorization.

SA WATER STANDARD DRAWINGS
SEWER CONSTRUCTION MANUAL
MAINTENANCE SHAFT
VARIO BEND OPTIONS
AND CUTTING TABLE

A3 SHT SIZE | 1 REVISION
TOTAL SHEETS:
SUPERSEDES: 02-0290-01 (L17)
DRAWING NUMBER
4005 – 20005 – 11
PREFIX NUMBER SHEET