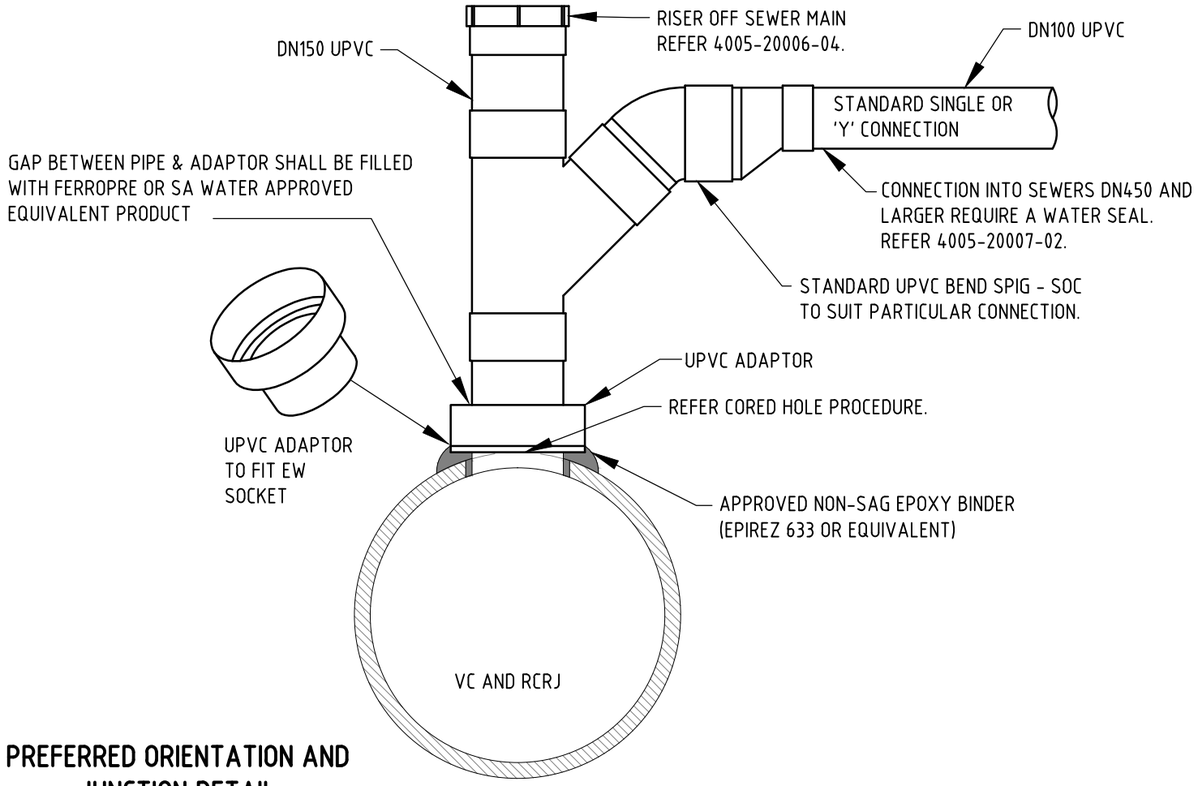

PREFERRED ORIENTATION AND JUNCTION DETAIL

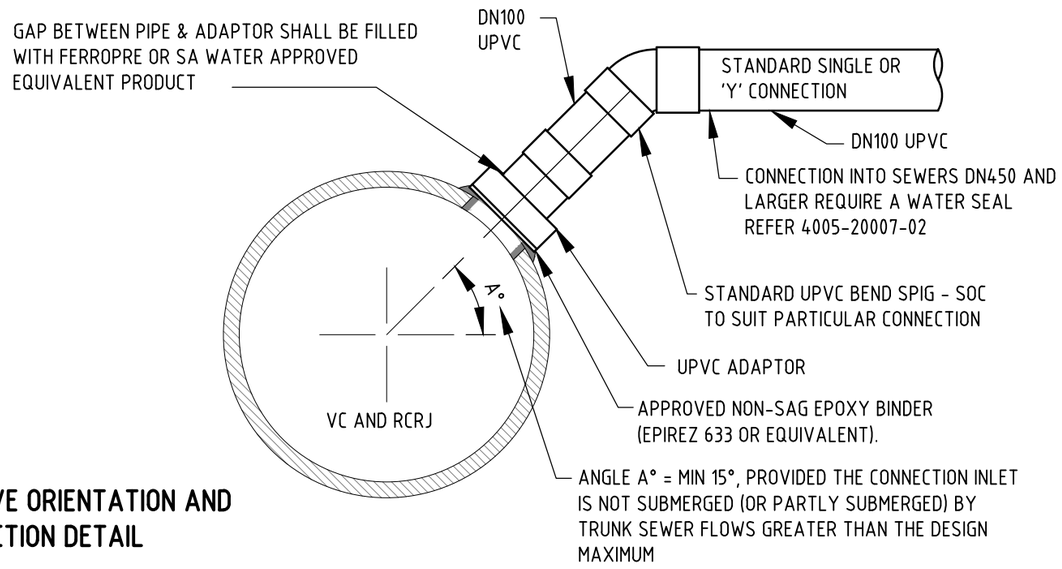

ALTERNATIVE ORIENTATION AND JUNCTION DETAIL

CORED HOLE:

- ALL FACES OF THE STUB SHALL BE CUT FLUSH WITH THE INSIDE FACE OF THE TRUNK SEWER, TO AVOID SNAGGING AND TO FACILITATE THE INSTALLATION OF POSSIBLE FUTURE LININGS.
- HOLE SHALL BE CORED OVERSIZE USING A DIAMOND TIPPED CUTTER (MIN 12 - MAX 15).
- THE DRILL CORE SHALL NOT BE ALLOWED TO FALL INTO THE SEWER.
- THOROUGHLY CLEAN THE VERTICAL CUT EDGES OF THE CORED HOLE. INCLUDING A 50 WIDE BAND AROUND THE CORED HOLE ON BOTH THE INSIDE AND OUTSIDE SURFACES OF THE TRUNK SEWER, IN READINESS FOR THE STUB.
- THE CONTRACTOR SHALL RETAIN THE DRILL CORE FOR PRESENTATION TO THE INSPECTOR.

PREPARATION OF UPVC STUB:

- THOROUGHLY CLEAN THE OUTSIDE FACE OF THE STUB AT THE JOINT USING UPVC CLEANER.
- POINT THE CLEANED STUB WITH A THIN CONTINUOUS LAYER OF APPROVED SOLVENT CEMENT, AND SPRINKLE CLEAN COARSE DRY SAND OVER THE FRESHLY PAINTED SURFACE TO PROVIDE A 'KEY' FOR THE EPOXY BINDER.
- LEAVE TO DRY FOR 15 MINUTES BEFORE USING STUB. (ENSURE THE 'KEY' SHALL EXTEND FOR THE FULL DEPTH OF THE PROPOSED JOINT).

INSTALLATION OF STUB:

STAGE 1 - PRIMING OPERATION:

- APPLY ONE THICK COAT OF THE APPROVED EPOXY BINDER AS A PRIMER COAT:
  - TO THE OUTSIDE FACE OF THE UPVC STUB, OVER THE SAND 'KEY', FOR THE FULL DEPTH OF THE PROPOSED JOINT.
  - TO THE VERTICAL CUT EDGES OF THE CORED HOLE. FINISH THE EPOXY FLUSH WITH THE INSIDE FACE OF THE TRUNK SEWER AND EXTEND TO THE CLEANED OUTSIDE FACE AS SHOWN.

STAGE 2 - INSTALL PRIMED STUB

- INSTALL THE PRIMED STUB CENTRALLY (AS SHOWN) WHILE THE PRIMER COAT IS STILL 'TACKY' (WORK TIME IS APPROX. 30 MINUTES AT 25°C).
- FILL THE JOINT TO ITS FULL DEPTH WITH THE SAME EPOXY BINDER.
- FINISH THE EPOXY FLUSH WITH THE INSIDE FACE OF THE TRUNK SEWER AND EXTEND ON TO THE CLEANED OUTSIDE FACE AS SHOWN. TROWEL THE FINISHED JOINT.

NOTE: COVERAGE WITH THE EPOXY IS CRITICAL TO ACHIEVE A JOINT OF ADEQUATE MECHANICAL STRENGTH AND TO PROVIDE PROTECTION FROM CORROSION WHERE REINFORCEMENT HAS BEEN EXPOSED DURING CORING.

RE-LINED TRUNK SEWER:

- FOR CORING OF PIPE & INSTALLATION OF THE UPVC ADAPTOR UTILISE SAME PROCEDURES AS DETAILED ABOVE.
- AT THE CORED HOLE, INTEGRITY OF THE HOLE LINER SHALL BE PRESERVED BY UTILISATION OF A 'TOP HAT' OR FERROPRE PROTECTING THE EXPOSED EDGES.

NOTES:

1. REFER 4005-20002-01 & 4005-20002-02 FOR GENERAL NOTES.
2. USE ALTERNATIVE ORIENTATION OPTION WHERE DEPTH IS INSUFFICIENT TO ACHIEVE THE PREFERRED OPTION, AND WHERE APPROVED BY THE SA WATER REPRESENTATIVE.
3. METHOD SHALL NOT BE USED ON PLASTILINED PIPES.
4. SIMILAR DETAILS FOR VC AND RCRJ SEWERS.
5. TEMPORARY ISOLATION OF TRUNK SEWER (OR DIVERSION OF FLOWS) MAY BE NECESSARY DURING LIVE INSTALLATIONS.
6. DN100 CONNECTIONS ILLUSTRATED. DN150 IS AN APPROVED OPTION.
7. REFER SECTION 6 FOR CONNECTION CONSTRUCTION.
8. ALL DIMENSIONS IN MILLIMETRES.

REVISION PANEL

REV	DATE	DRN	DETAILS	APR
1	31/03/16	MS	2016 STANDARDS REVIEW	TG

CURRENT REV
AUTHORISED:
SIGNATURE:

DESIGN PANEL

DESIGNED:	03/08/15	AUTHORISED:	31/06/16
RJP		T.GALEK	
DRAWN:	25/09/15	SIGNATURE:	
MS			
REVIEWED:	21/03/16		
TG			

Government of South Australia
SA Water

This drawing is the property of the SOUTH AUSTRALIAN WATER CORPORATION and shall not be copied or modified in part or in whole without authorization.

SA WATER STANDARD DRAWINGS
SEWER CONSTRUCTION MANUAL
NEW PROPERTY CONNECTION OFF
EXISTING VC & RCRJ
SEWER DN375 & LARGER

A3 SHT SIZE | 1 REVISION

TOTAL SHEETS:

SUPERSEDES: 94-0162-01 (K12)

DRAWING NUMBER
4005-20007-03
PREFIX NUMBER SHEET